EXHIBIT A

SCHEMATIC SETUP FOR PRESSURE TEST EQUIPMENT

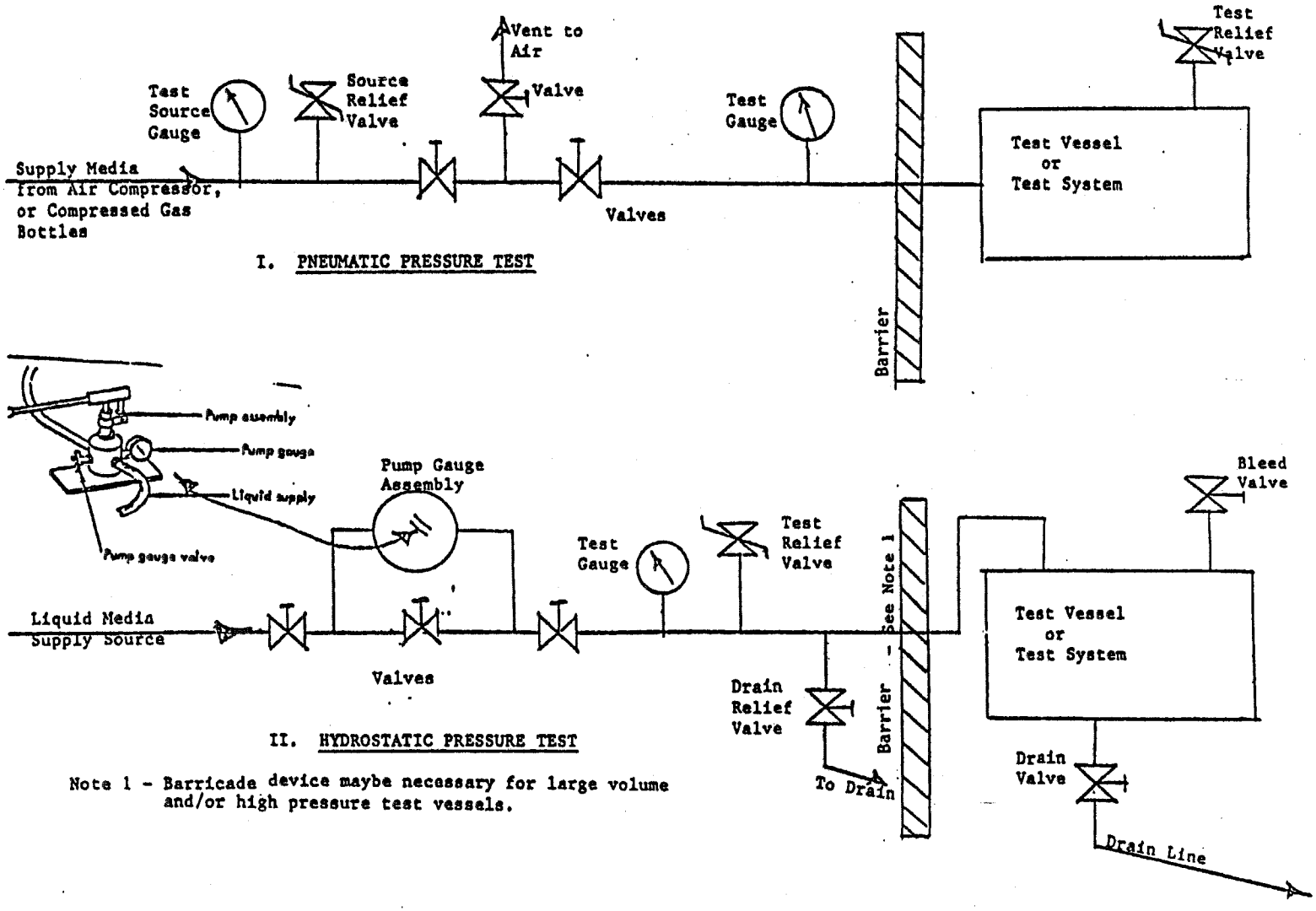

I. PNEUMATIC PRESSURE TEST

II. HYDROSTATIC PRESSURE TEST

Note 1 - Barricade device maybe necessary for large volume and/or high pressure test vessels.